PANORAM V16 *DUAL WIRELESS*

16 function cycle computer

GB

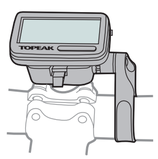

Art. no. TPC-13

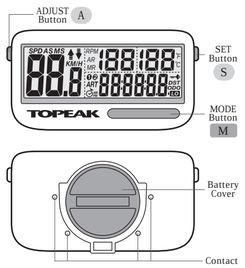

DISPLAY	FUNCTION
SPD	Current speed
AS	Average speed
MS	Maximun speed
▲▼	Speed pace indicator
KM/H M/H	Unit selection
RPM	Current Cadence (RPM)
AR	Average Cadence (RPM)
MR	Maximun Cadence (RPM)
°F °C	Current temperature
❶ ❷	Bike1/Bike2 wheel circumference setting
RT	Ride time
ART	Accumulated ride time
⊙	12H/24H clock
⏱	Trip Time (Stopwatch)
⊸	Button lock
DST	Distance
ODO	Accumulated distance
LO	Low battery indicator

DETAILED PARTS DESCRIPTION

ACCESSORIES (Fits all size handlebar)

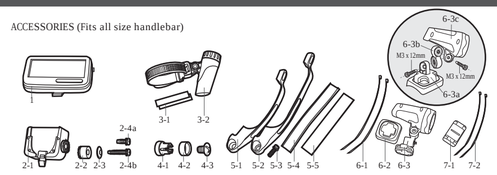

1. Computer Body
2. Computer Bracket Set
   - 2-1 Computer Bracket
   - 2-2 Spacer
   - 2-3 Washer
   - 2-4a M3 x 12mm Bolt
   - 2-4b M4 x 23mm Bolt
3. Wheel Sensor Set
   - 3-1 Sensor Rubber Pad
   - 3-2 Sensor (Transmitter) with Zip Belt
4. Wheel Magnet Set
   - 4-1 Wheel Magnet
   - 4-2 Magnet Ring
   - 4-3 Magnet Screw
5. Handlebar Bracket
   - 5-1 Bracket (26.0~22.2)
   - 5-2 Bracket (31.8~28.6)
   - 5-3 Handlebar Bracket Bolt
   - 5-4 Rubber Pad (Thin)
   - 5-5 Rubber Pad (Thick)
6. Cadence Sensor Set
   - 6-1 Sensor Zip Tie (width: 3.5mm - 2 pcs)
   - 6-2 Sensor Rubber Pad
   - 6-3 Sensor (Transmitter)
   - 6-3a Sensor Base
   - 6-3b Sensor Mount Arm
   - 6-3c Sensor Housing
7. Cadence Magnet Set
   - 7-1 Cadence Magnet
   - 7-2 Magnet Zip Tie (width: 2.5mm - 2 pcs)

INSTALLATION

1 Comuter / Handlebar Bracket Set

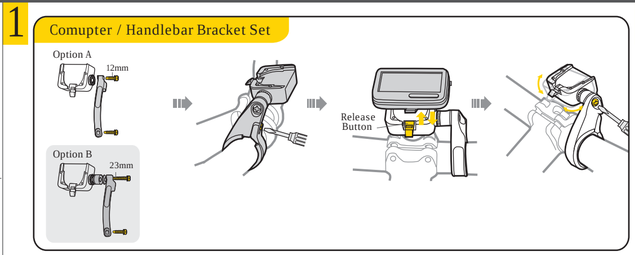

2 Wheel Sensor/Magnet Set

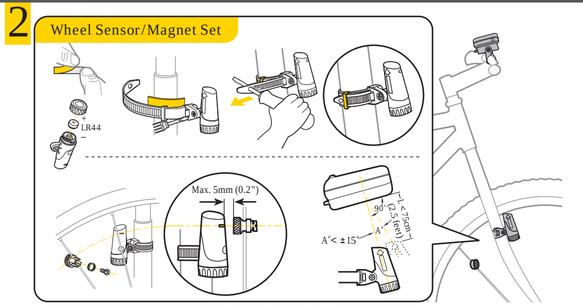

NOTE: During non-ride periods, never leave wheel magnet next to fork sensor. This will shorten sensor battery life.

3 Cadence Sensor/Magnet Set

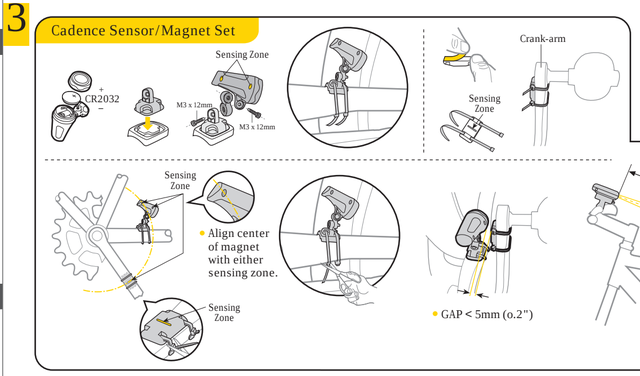

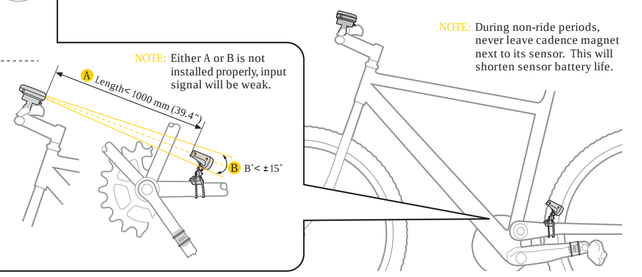

NOTE: Either A or B is not installed properly, input signal will be weak.

NOTE: During non-ride periods, never leave cadence magnet next to its sensor. This will shorten sensor battery life.

DETERMINE WHEEL CIRCUMFERENCE FIRST

METHOD A). WHEEL CIRCUMFERENCE REFERENCE TABLE

Tire Size	Designation	Wheel Circumference	Tire Size	Designation	Wheel Circumference
47-305	16 x1.75 x2	1217	32-630	27x1 1/4	2199
47-406	20 x1.75x2	1590	28-630	27x1 1/4 Fifty	2174
37-540	24x1 3/8A	1948	40-622	28x1.5	2224
47-507	24x1.75x2	1907	40-622	28x1.75	2268
23-571	26x1	1973	40-635	28x1 1/2	2265
40-559	26x1.5	2026	37-622	28x1 1/8x1 5/8	2205
44-559	26x1.6	2051	18-622	700x18c	2102
47-559	26x1.75x2	2070	20-622	700x20c	2114
50-559	26x1.9	2089	23-622	700x23c	2133
54-559	26x2.00	2114	25-622	700x25c	2146
57-559	26x2.215	2133	28-622	700x28c	2149
37-590	26x1 3/8	2105	32-622	700x32c	2174
37-584	26x1 3/8x1 1/2	2086	35-622	700x35c	2205
			40-622	700x40c	2224

METHOD B). WHEEL CIRCUMFERENCE MEASUREMENT

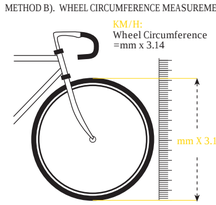

WHEEL CIRCUMFERENCE OF MY BIKES

BIKE 1:

BIKE 2:

CHANGING BATTERIES

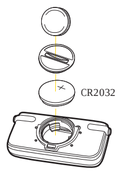

NOTE:
The sensor battery is supplied, but not installed. Install the sensor battery before using the computer.

RANGE

DISPLAY	FUNCTION	SHOWN ON SCREEN	READ ON SCREEN	SPECIFICATIONS	INCREMENTS	ACCURACY
SPD	Current speed	26.7	26.7 KM/H	99.9 KM/H, 99.9 M/H over 99.9 "99.9" will apprear	0.1 KM/H or M/H	±1 %
AS	Average speed	30.0	30.0 KM/H	99.9 KM/H, 99.9 M/H	0.1 KM/H or M/H	±0.1 %
MS	Maximun speed	45.0	45.0 KM/H	99.9 KM/H, 99.9 M/H	0.1 KM/H or M/H	±0.1 %
▲▼	Speed pace indicator	▲ SPD > AVG ▼ SPD < AVG				
KM/H M/H	Unit selection	KM/H				
RPM	Current Cadence (RPM)	30	30	0~199	1	
AR	Average Cadence (RPM)	45	45	0~199	1	
MR	Maximun Cadence (RPM)	80	80	0~199	1	
°F °C	Current temperature	25	25°C	-10°C~60°C (14°F~140°F)		±2°C
❶ ❷	Bike1/Bike2 wheel circumference setting	°c2265 °c2050	BIKE1: 2265mm, BIKE2: 2050mm	0~3999	1 mm	
RT	Ride time	18:52	18M52S	0:00:00~99:59:59	1 Second	±0.1 %
ART	Accumulated ride time	130:07	130H7M	0:00:00~99999:59	1 Minute	±0.1 %
⊙	12H/24H clock	7:19:00	7H19M0S AM (12H)	1:00:00~12:59:59 (12H) 0:00:00~23:59:59 (24H)	1 Second	±0.003 %
⏱	Trip Time (Stopwatch)	1:14:26	1H14M26S	0:00:00~99(H):59(M):59(S)	1 Second	±0.003 %
⊸	Button lock	⊸	lock			
DST	Distance	58	5.8 KM	0.0~999.9 KM or M	0.1 KM or M	±0.1 %
ODO	Accumulated distance	999.8	999.8 KM	0.0~99999.9 KM or M	0.1 KM or M	±0.1 %
LO	Low battery indicator		low battery	< 2.6 V		

Wheel circumference default: BIKE1-2155mm, BIKE2-2050mm

Sensor with Transmitter: No Contact Magnet sensor with Wireless Transmitter.

Wireless Sensing Distance: 75cm (29.5") between the sensor (transmitter) and the computer body.

Cross-Talking Interference: Within 40 cm (15.8"), no interference by 2 bicyclescarrying similar cycle computers,even when ridden side by side.

Wheel Circumference Setting: 0mm - 3999mm (1mm increment)

Operating Temperature: 0˚C ~ 60˚C (32˚F ~ 140˚F)

Storage Temperature: - 20˚C ~ 80˚C (-4˚F ~ 176˚F)

Main Unit Battery Power: 3V battery x 2 (CR2032), Battery life, approximately 1.3 years. (Based on an average of 1.5 hours use per day)

Transmitter Battery Power: 1.5V battery x 1 (typical LR44). 15,000 miles riding distance, or approximately 2 years.

Dimensions/ Weight:
Computer Body: 66 x 36 x 18 mm/ 32.2 g
Sensor(Transmitter): 20.0 mmø x 48.0 mm/ 13 g
29.0 mmø x 49.3 mm/ 20 g

PRECAUTIONS

1. The TOPEAK PANORAM cycle computer can be used in the rain but should not be used underwater.
2. Do not leave the main unit exposed to direct sunlight when not riding the bicycle.
3. Do not disassemble the computer body or its accessories.
4. Check relative positions and gap between sensor and magnet periodically.
5. Clean the bracket contacts and the button of the computer body periodically.
6. Do not use harsh chemicals to clean the computer body or its accessories.
7. Remember to pay attention to the road while riding.

TROUBLE SHOOTING

Check the following before bringing unit in for repair.

PROBLEM	CHECK ITEMS	REMEDY
No display	1. Is the battery exhausted? 2. Is the battery installed correctly?	1. Replace the battery. 2. Make sure that the positive (+) pole of the battery is facing the battery cap.
No current speed or incorrect data	1. Is it in setup mode? 2. Are the contacts between the computer body and the bracket poor? 3. Are the relative positions and gap between sensor and magnet correct? 4. Is the wheel circumference correct?	1. Refer to the data setting procedure and complete the adjustment. 2. Clean the contacts. 3. Refer to INSTALLATION and re-adjust correctly. 4. Refer to CIRCUMFERENCE SETTING and enter correct value.
Irregular display		Refer to "Clear All Data setting" and initiate the computer again.
LCD is black	Did you leave the main unit in direct sunlight when not riding the bicycle for a long while?	Place the computer body in the shade to return to normal state.
Display is slow	Is the temperature below 0˚C (32˚F)?	The unit will return to normal state when the temperature rises.

IMPORTANT NOTE

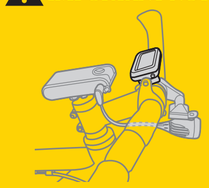

When using the Topeak Panoram wireless cycle computer and any Topeak light with powerpack simultaneously, it is advised to mount the light as shown.

A. SETUP

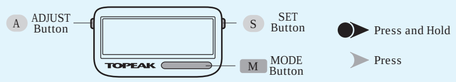

A1. CLEAR ALL DATA

A2. UNIT SELECTION

A3. BIKE1 CIRCUMFERENCE SETTING

A4. CLOCK SELECTION

A5. BIKE1 ODO SETTING

A6. BIKE1 ART SETTING

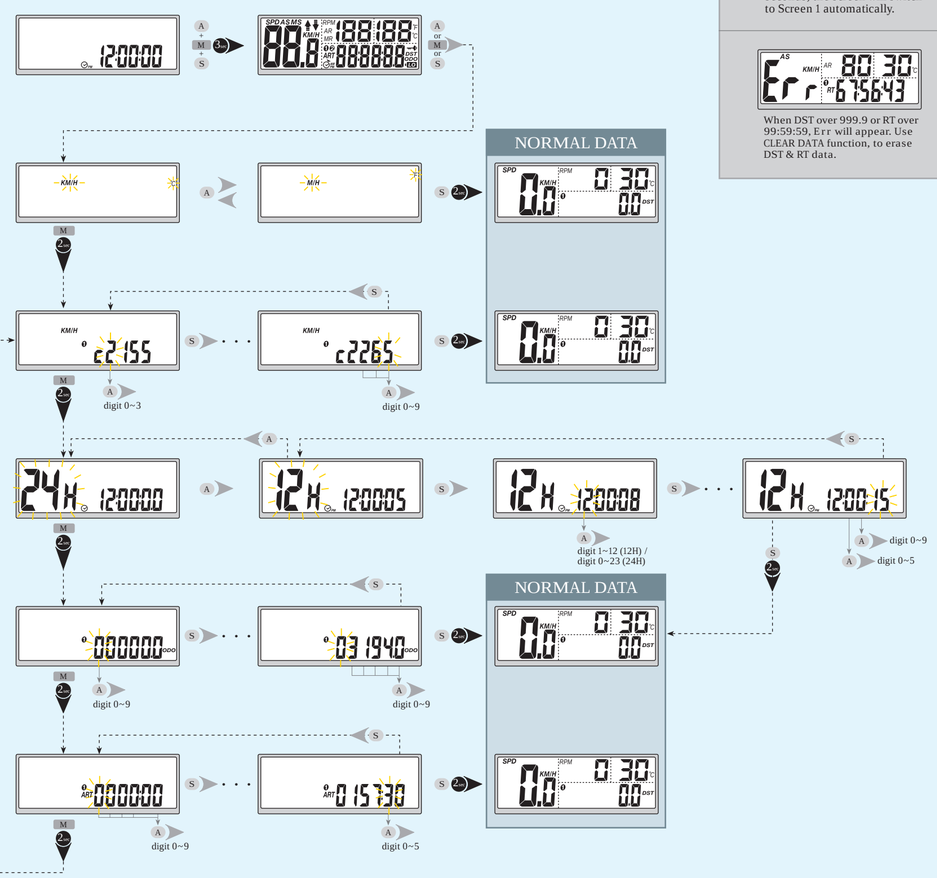

NOTE:
If no data is entered for 20 seconds, the screen will switch to Screen 1 automatically.

When DST over 999.9 or RT over 99:59:59, Err will appear. Use CLEAR DATA function, to erase DST & RT data.

B. NORMAL DATA SETTING (NON-RIDING STATUS)

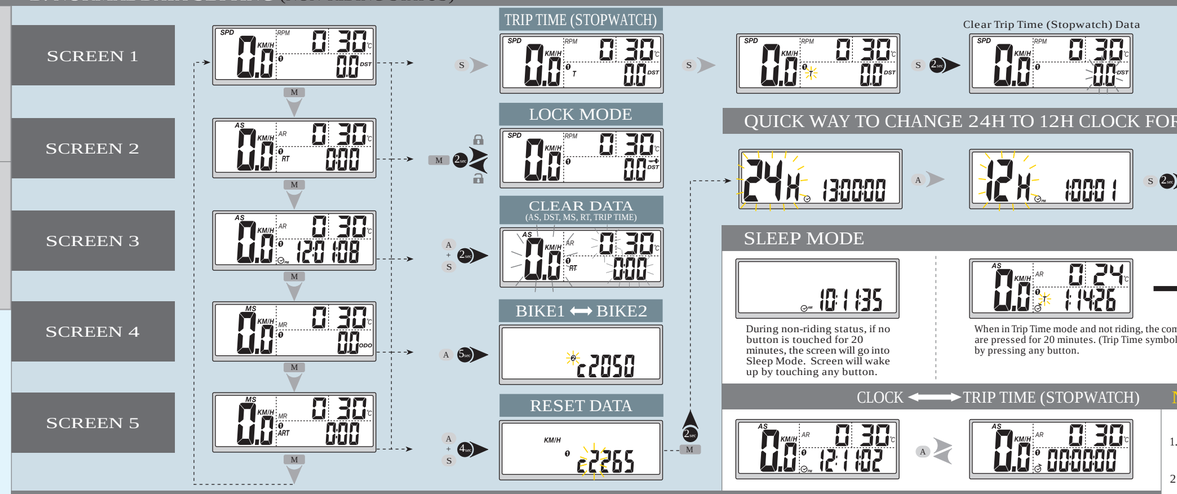

QUICK WAY TO CHANGE 24H TO 12H CLOCK FORMAT

SLEEP MODE

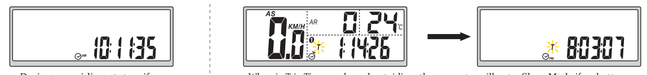

During non-riding status, if no button is touched for 20 minutes, the screen will go into Sleep Mode. Screen will wake up by touching any button.

When in Trip Time mode and not riding, the computer will enter Sleep Mode if no buttons are pressed for 20 minutes. (Trip Time symbol will flash). The computer will wake up by pressing any button.

CLOCK ⟷ TRIP TIME (STOPWATCH)

NOTE

1. CLEAR ALL DATA SETTING will clear all stored data.
2. CLEAR ALL DATA SETTING is required during initial setup or after a battery change.
3. KM/H or M/H selection is only available from CLEAR ALL DATA SETTING.
4. Before changing the computer battery, write down the stored data, ODO and ART. All data for Bike1 and Bike2 will be erased automatically when replacing the battery. However, this computer will allow you to re-enter your stored data. See steps A5 and A6 in the Setup section.

C. NORMAL DATA SETTING (RIDING STATUS)

NOTE: During non-riding status, if no button is touched for 20 minutes, the screen will go into Sleep Mode. Remember to touch any button to wake up the screen before riding.

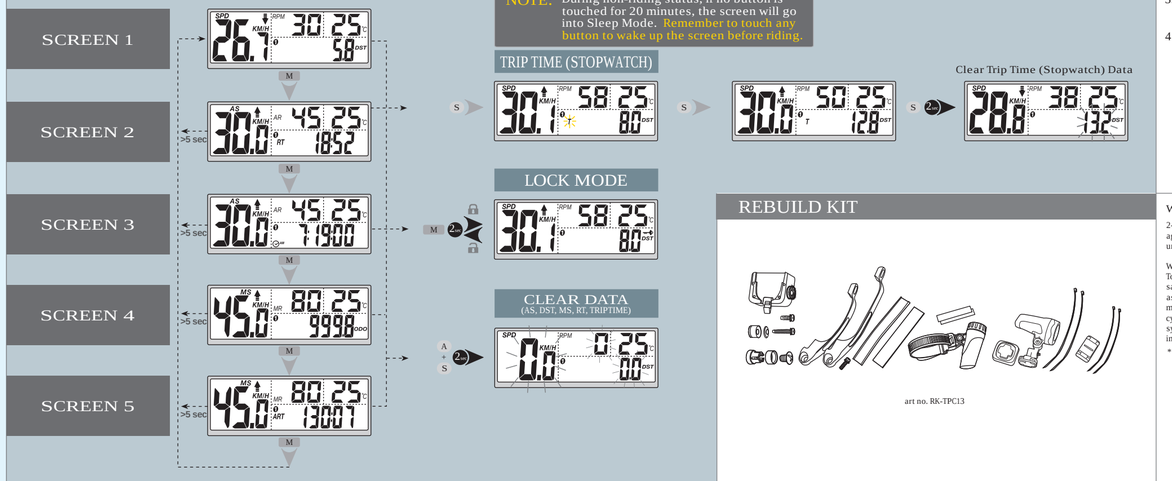

REBUILD KIT

art no. RK-TPC13

WARRANTY

2-year Warranty: All electronic and mechanical components against manufacturer defects only. Batteries are not covered under any implied warranty.

Warranty Claim Requirements
To obtain warranty service, you must have your original sales receipt. Items returned without a sales receipt will assume that the warranty begins on the date of manufacture. All warranties will be void if PANORAM V16 cycle computer is damaged due to user crash, abuse, system alteration, modification, or used in any way not intended as described in this operating manual.

* The specifications and design are subject to change without notice.

Topeak products are available only from professional bicycle shops.
Please contact your nearest Topeak authorized bicycle dealer for any questions.
For customers in the USA, call: 1-800-250-3068
Website: www.topeak.com

Copyright © Topeak, Inc. 2009

M-TPC13-GB 5/09